# TARA Pillar tap cold water - Brushed Durabrass (23kt Gold)



17 500 892 Product version from 6/30/2009

- 100mm projection
- fixed spout
- circular, air-enriched flow
- height of mixer 115 mm
- height up to aerator 40 mm
- hole diameter 35 mm
- 1/2" connection
- rosette Ø 45 mm
- max. flow 7 l/min
- lead-free
- This product can help a building meet the requirements of Green Building Rating Systems, e.g. LEED®, BREEAM®, DGNB

| | |
|---|---|
| Brushed Durabrass (23kt Gold) | 17 500 892-28 |
| Chrome | 17 500 892-00 |
| Brushed Platinum | 17 500 892-06 |
| Platinum | 17 500 892-08 |
| Dark Chrome | 17 500 892-19 |
| Matte Black | 17 500 892-33 |
| Brushed Bronze | 17 500 892-42 |
| Brushed Champagne (22kt Gold) | 17 500 892-46 |
| Champagne (22kt Gold) | 17 500 892-47 |
| Brushed Chrome | 17 500 892-93 |
| Brushed Dark Platinum | 17 500 892-99 |

We reserve the right to change designs, product range and technical specifications without prior notice.
More information can be found at: www.dornbracht.com +49 (0) 2371 8899 900 mail@dornbracht.com

# TARA Pillar tap cold water - Brushed Durabrass (23kt Gold)



17 500 892 Product version from 6/30/2009

mm [inches]

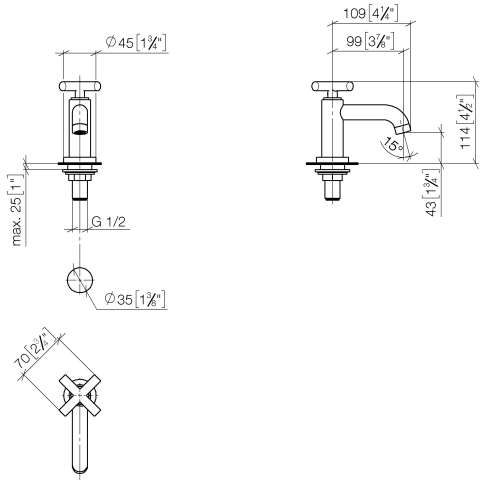


## Flow rate chart

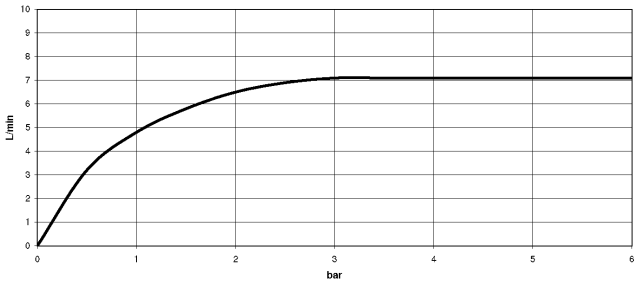


## Codes & Standards

| | | |
|---|---|---|
| DIN 4109 | ISO 3822 | Ü-Zeichen |

17 500 892 Product version from 6/30/2009

## Certificates

LGA_18

# TARA Pillar tap cold water - Brushed Durabrass (23kt Gold)

17 500 892 Product version from 6/30/2009

Parts for other finishes can be found here: Chrome

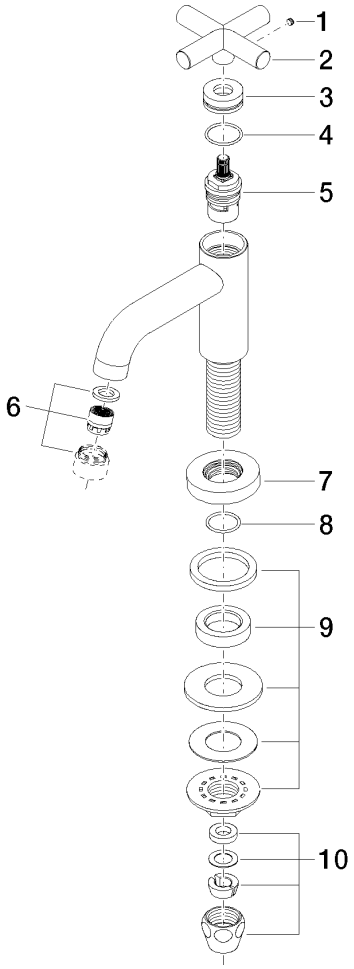


## Spare parts list

| No. | Item Number | Name | Quantity used | Delivery time |
|---|---|---|---|---|
| 1 | 09 31 11 055 90 | pin | 1 | 2 |
| 2 | 09 20 89 011-28 | handle | 1 | 20 |
| 3 | 09 21 02 089-28 | sleeve | 1 | 20 |
| 4 | 09 14 10 085 90 | seal | 1 | 2 |
| 5 | 90 90 03 135 00 90 | top | 1 | 2 |
| 6 | 90 23 01 068 01-28 | aerator | 1 | 20 |
| 7 | 09 27 89 106-28 | rosette | 1 | 20 |
| 8 | 90 14 10 032 00 90 | seal | 1 | 2 |
| 9 | 04 23 10 010 88 90 | fixing set | 1 | 2 |
| 10 | 90 23 30 040 00-28 | threaded connector | 1 | 20 |

We reserve the right to change designs, product range and technical specifications without prior notice.
More information can be found at: www.dornbracht.com +49 (0) 2371 8899 900 mail@dornbracht.com